LM1972 µPot 2-Channel 78dB Audio Attenuator with Mute

Check for Samples: LM1972

FEATURES

- **3-Wire Serial Interface**
- **Daisy-Chain Capability**
- **104dB Mute Attenuation**
- **Pop and Click Free Attenuation Changes**

APPLICATIONS

- **Automated Studio Mixing Consoles**
- **Music Reproduction Systems**
- **Sound Reinforcement Systems**
- **Electronic Music (MIDI)**
- **Personal Computer Audio Control**

KEY SPECIFICATIONS

- **Total Harmonic Distortion + Noise: 0.003 % (max)**
- **Frequency response: 100 kHz (−3dB) (min)**
- **Attenuation range (excluding mute): 78 dB (typ)**
- **Differential attenuation: ±0.25 dB (max)**
- **Signal-to-noise ratio (ref. 4 Vrms): 110 dB (min)**
- **Channel separation: 100 dB (min)**

DESCRIPTION

The LM1972 is a digitally controlled 2-channel 78dB audio attenuator fabricated on a CMOS process. Each channel has attenuation steps of 0.5dB from 0dB–47.5dB, 1.0dB steps from 48dB–78dB, with a mute function attenuating 104dB. Its logarithmic attenuation curve can be customized through software to fit the desired application.

The performance of a µPot is demonstrated through its excellent Signal-to-Noise Ratio, extremely low (THD+N), and high channel separation. Each µPot contains a mute function that disconnects the input signal from the output, providing a minimum attenuation of 96dB. Transitions between any attenuation settings are pop free.

The LM1972's 3-wire serial digital interface is TTL and CMOS compatible; receiving data that selects a channel and the desired attenuation level. The Data-Out pin of the LM1972 allows multiple µPots to be daisy-chained together, reducing the number of enable and data lines to be routed for a given application.

Typical Application

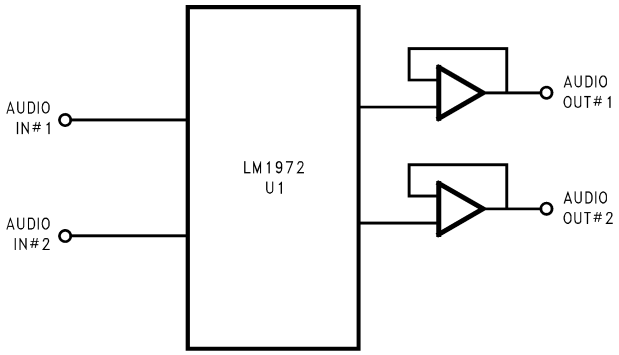

Figure 1. Typical Audio Attenuator Application Circuit

Connection Diagram

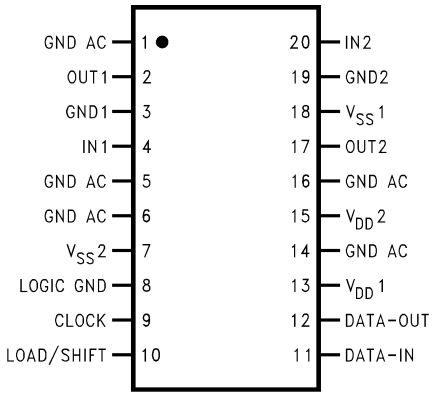

Figure 2. 20-Lead SOIC - Top View See DW Package

Please be aware that an important notice concerning availability, standard warranty, and use in critical applications of Texas Instruments semiconductor products and disclaimers thereto appears at the end of this data sheet.

All trademarks are the property of their respective owners.

PRODUCTION DATA information is current as of publication date. Products conform to specifications per the terms of the Texas Instruments standard warranty. Production processing does not necessarily include testing of all parameters.

Copyright © 1995–2013, Texas Instruments Incorporated

These devices have limited built-in ESD protection. The leads should be shorted together or the device placed in conductive foam during storage or handling to prevent electrostatic damage to the MOS gates.

Absolute Maximum Ratings [1][2][3]

Supply Voltage (V_{DD}–V_{SS})		15V
Voltage at Any Pin		V_{SS} − 0.2V to V_{DD} + 0.2V
Power Dissipation [4]		150 mW
ESD Susceptability [5]		2000V
Junction Temperature		150°C
Soldering Information	DW Package (10 sec.)	+260°C
Storage Temperature		−65°C to +150°C

(1) All voltages are measured with respect to GND pins (1, 3, 5, 6, 14, 16, 19), unless otherwise specified.
(2) *Absolute Maximum Ratings* indicate limits beyond which damage to the device may occur. Operating Ratings indicate conditions for which the device is functional. *Electrical Characteristics* state DC and AC electrical specifications under particular test conditions. This assumes that the device is within the Operating Ratings. The typical value is a good indication of device performance.
(3) If Military/Aerospace specified devices are required, please contact the Texas Instruments Sales Office/ Distributors for availability and specifications.
(4) The maximum power dissipation must be derated at elevated temperatures and is dictated by T_{JMAX}, θ_{JA}, and the ambient temperature T_A. The maximum allowable power dissipation is PD = $(T_{JMAX} - T_A)/\theta_{JA}$ or the number given in the Absolute Maximum Ratings, whichever is lower. For the LM1972, T_{JMAX} = +150°C, and the typical junction-to-ambient thermal resistance, when board mounted, is 65°C/W.
(5) Human body model, 100 pF discharged through a 1.5 kΩ resistor.

Operating Ratings [1][2]

		T_{MIN}	T_A	T_{MAX}
Temperature Range	$T_{MIN} \le T_A \le T_{MAX}$	0°C	$\le T_A$	≤ +70°C
Supply Voltage (V_{DD} − V_{SS})		4.5V to 12V		

(1) All voltages are measured with respect to GND pins (1, 3, 5, 6, 14, 16, 19), unless otherwise specified.
(2) *Absolute Maximum Ratings* indicate limits beyond which damage to the device may occur. Operating Ratings indicate conditions for which the device is functional. *Electrical Characteristics* state DC and AC electrical specifications under particular test conditions. This assumes that the device is within the Operating Ratings. The typical value is a good indication of device performance.

Copyright © 1995–2013, Texas Instruments Incorporated

Electrical Characteristics [(1)(2)]

The following specifications apply for all channels with V_{DD} = +6V, V_{SS} = −6V, V_{IN} = 5.5 Vpk, and f = 1 kHz, unless otherwise specified. Limits apply for T_A = 25°C. Digital inputs are TTL and CMOS compatible.

Symbol	Parameter	Conditions	LM1972		Units (Limits)
			Typical [(3)]	Limit [(4)]	
I_S	Supply Current	Inputs are AC Grounded	2	**4**	mA (max)
THD+N	Total Harmonic Distortion plus Noise	V_{IN} = 0.5 Vpk @ 0dB Attenuation	0.0008	0.003	% (max)
XTalk	Crosstalk (Channel Separation)	0dB Attenuation for V_{IN} V_{CH} measured @ −78dB	110	100	dB (min)
SNR	Signal-to-Noise Ratio	Inputs are AC Grounded @ −12dB Attenuation A-Weighted	120	110	dB (min)
A_M	Mute Attenuation		104	96	dB (min)
	Attenuation Step Size Error	0dB to −47.5dB −48dB to −78dB		±0.05 ±0.25	dB (max) dB (max)
	Absolute Attenuation Error	Attenuation @ 0dB Attenuation @ −20dB Attenuation @ −40dB Attenuation @ −60dB Attenuation @ −78dB	0.03 19.8 39.5 59.3 76.3	0.5 19.0 38.5 57.5 74.5	dB (min) dB (min) dB (min) dB (min) dB (min)
	Channel-to-Channel Attenuation Tracking Error	Attenuation @ 0dB, −20dB, −40dB, −60dB Attenuation @ −78dB		±0.5 ±0.75	dB (max) dB (max)
I_{LEAK}	Analog Input Leakage Current	Inputs are AC Grounded	10.0	100	nA (max)
R_{IN}	AC Input Impedance	Pins 4, 20, V_{IN} = 1.0 Vpk, f = 1 kHz	40	20 60	kΩ (min) kΩ (max)
I_{IN}	Input Current	@ Pins 9, 10, 11 @ 0V < V_{IN} < 5V	1.0	±100	nA (max)
f_{CLK}	Clock Frequency		3	2	MHz (max)
V_{IH}	High-Level Input Voltage	@ Pins 9, 10, 11		2.0	V (min)
V_{IL}	Low-Level Input Voltage	@ Pins 9, 10, 11		0.8	V (max)
	Data-Out Levels (Pin 12)	V_{DD}=6V, V_{SS}=0V		0.1 5.9	V (max) V (min)

(1) All voltages are measured with respect to GND pins (1, 3, 5, 6, 14, 16, 19), unless otherwise specified.
(2) *Absolute Maximum Ratings* indicate limits beyond which damage to the device may occur. Operating Ratings indicate conditions for which the device is functional. *Electrical Characteristics* state DC and AC electrical specifications under particular test conditions. This assumes that the device is within the Operating Ratings. The typical value is a good indication of device performance.
(3) Typicals are measured at 25°C and represent the parametric norm.
(4) Limits are specified to Texas Instrument's AOQL (Average Output Quality Level).

Copyright © 1995–2013, Texas Instruments Incorporated

Timing Diagram

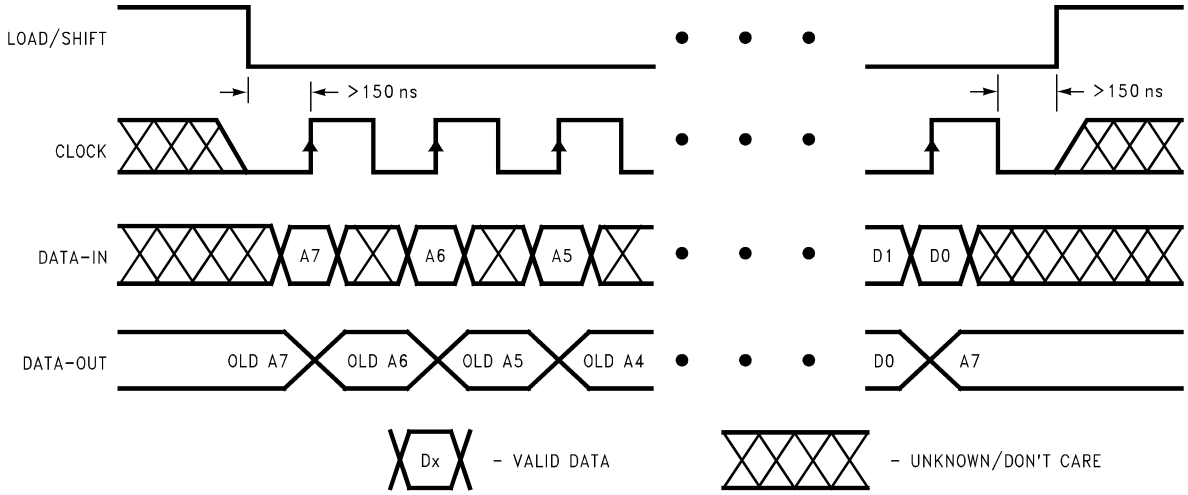

Figure 3. Timing Diagram

PIN DESCRIPTIONS

Signal Ground (3, 19): Each input has its own independent ground, GND1 and GND2.

Signal Input (4, 20): There are 2 independent signal inputs, IN1 and IN2.

Signal Output (2, 17): There are 2 independent signal outputs, OUT1 and OUT2.

Voltage Supply (13, 15): Positive voltage supply pins, V_{DD1} and V_{DD2}.

Voltage Supply (7, 18): Negative voltage supply pins, V_{SS1} and V_{SS2}. To be tied to ground in a single supply configuration.

AC Ground (1, 5, 6, 14, 16): These five pins are not physically connected to the die in any way (i.e., No bondwires). These pins must be AC grounded to prevent signal coupling between any of the pins nearby. Pin 14 should be connected to pins 13 and 15 for ease of wiring and the best isolation, as an example.

Logic Ground (8): Digital signal ground for the interface lines; CLOCK, LOAD/SHIFT, DATA-IN and DATA-OUT.

Clock (9): The clock input accepts a TTL or CMOS level signal. The clock input is used to load data into the internal shift register on the rising edge of the input clock waveform.

Load/Shift (10): The load/shift input accepts a TTL or CMOS level signal. This is the enable pin of the device, allowing data to be clocked in while this input is low (0V).

Data-In (11): The data-in input accepts a TTL or CMOS level signal. This pin is used to accept serial data from a microcontroller that will be latched and decoded to change a channel's attenuation level.

Data-Out (12): This pin is used in daisy-chain mode where more than one µPot is controlled via the same data line. As the data is clocked into the chain from the µC, the preceding data in the shift register is shifted out the DATA-OUT pin to the next µPot in the chain or to ground if it is the last µPot in the chain. The LOAD/SHIFT line goes high once all of the new data has been shifted into each of its respective registers.

Copyright © 1995–2013, Texas Instruments Incorporated

Connection Diagram

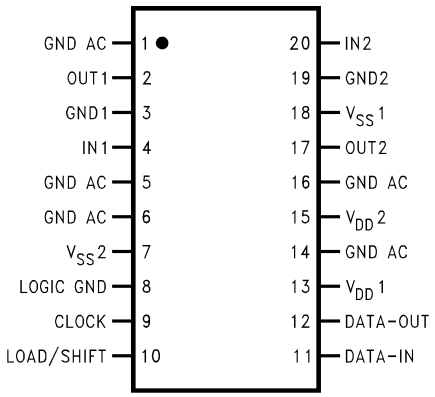

Typical Performance Characteristics

Supply Current vs Supply Voltage

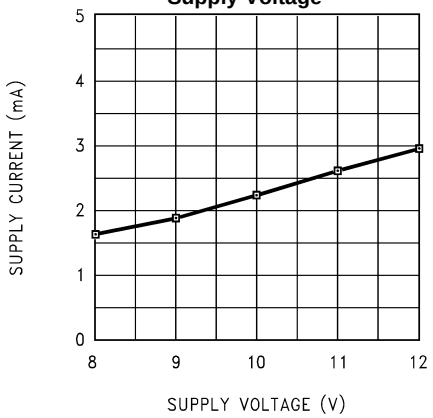

Figure 4.

Supply Current vs Temperature

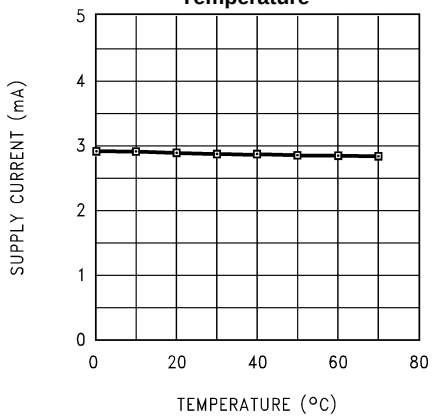

Figure 5.

Noise Floor Spectrum by FFT Amplitude vs Frequency

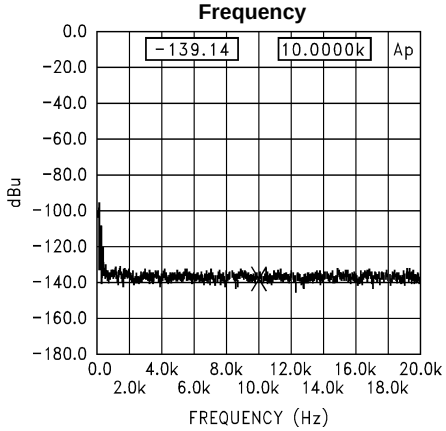

Figure 6.

THD vs Freq by FFT $V_{DD} - V_{SS}$ = 12V

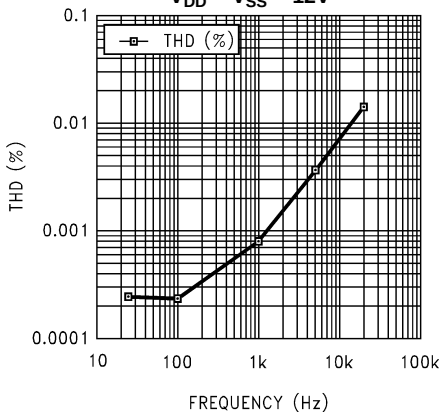

Figure 7.

THD vs V_{OUT} at 1 KHz by FFT $V_{DD} - V_{SS}$ = 12V

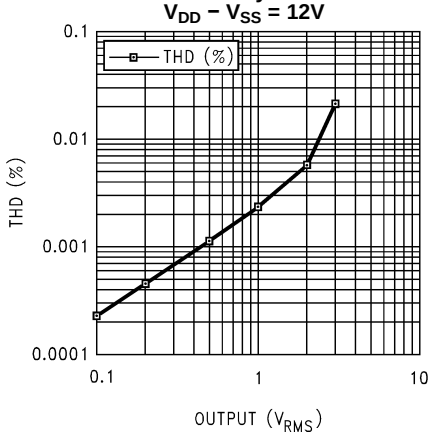

Figure 8.

Crosstalk Test

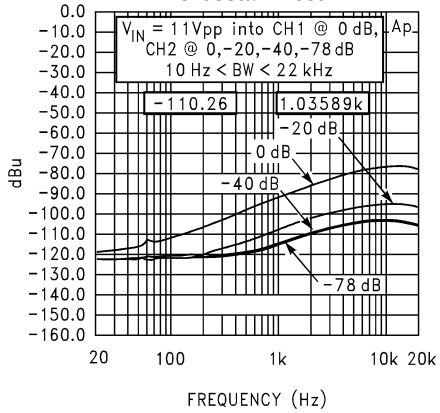

Figure 9.

Copyright © 1995–2013, Texas Instruments Incorporated

Typical Performance Characteristics (continued)

THD + N vs Frequency and Amplitude

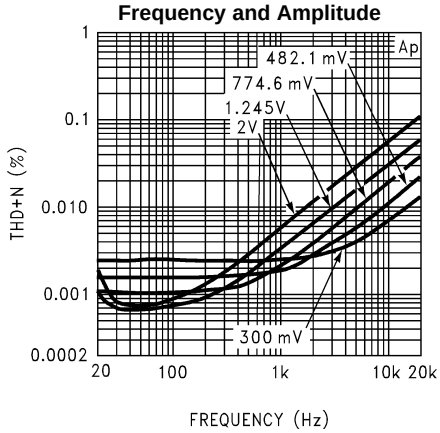

Figure 10.

FFT of 1 kHz THD

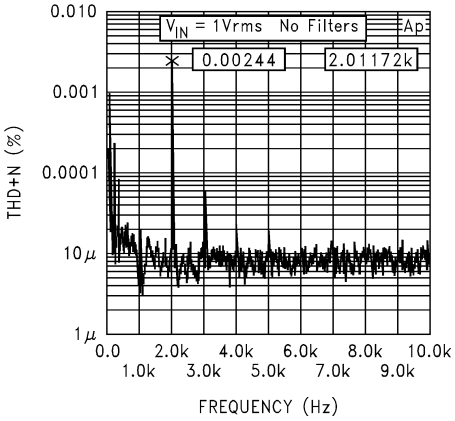

Figure 11.

FFT of 20 kHz THD

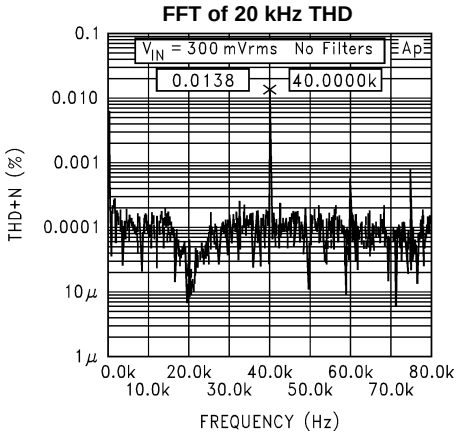

Figure 12.

THD + N vs Amplitude

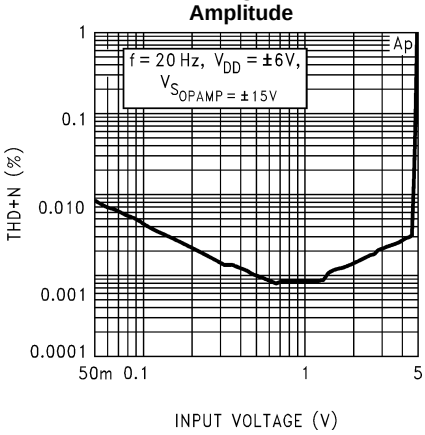

Figure 13.

THD + N vs Amplitude

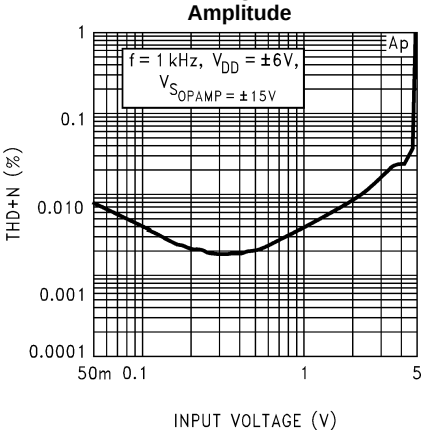

Figure 14.

THD + N vs Amplitude

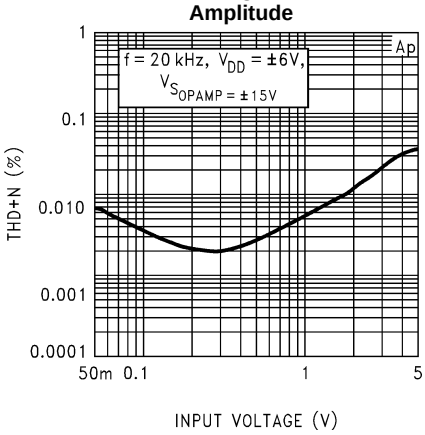

Figure 15.

Copyright © 1995–2013, Texas Instruments Incorporated

APPLICATION INFORMATION

ATTENUATION STEP SCHEME

The fundamental attenuation step scheme for the LM1972 µPot is shown in Figure 16. This attenuation step scheme, however, can be changed through programming techniques to fit different application requirements. One such example would be a constant logarithmic attenuation scheme of 1dB steps for a panning function as shown in Figure 17. The only restriction to the customization of attenuation schemes are the given attenuation levels and their corresponding data bits shown in Table 1. The device will change attenuation levels only when a channel address is recognized. When recognized, the attenuation level will be changed corresponding to the data bits shown in Table 1. As shown in Figure 19, an LM1972 can be configured as a panning control which separates the mono signal into left and right channels. This circuit may utilize the fundamental attenuation scheme of the LM1972 or be programmed to provide a constant 1dB logarithmic attenuation scheme as shown in Figure 17.

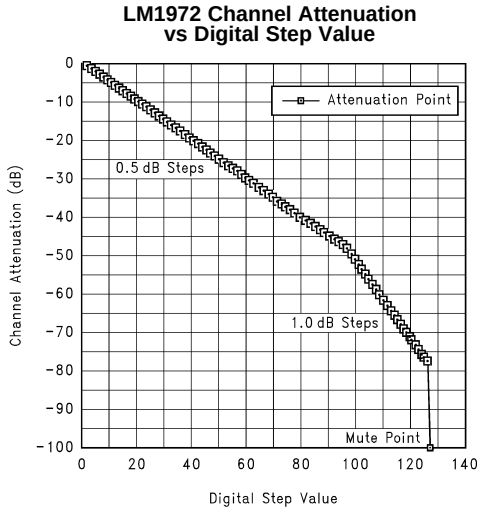

Figure 16. LM1972 Attenuation Step Scheme

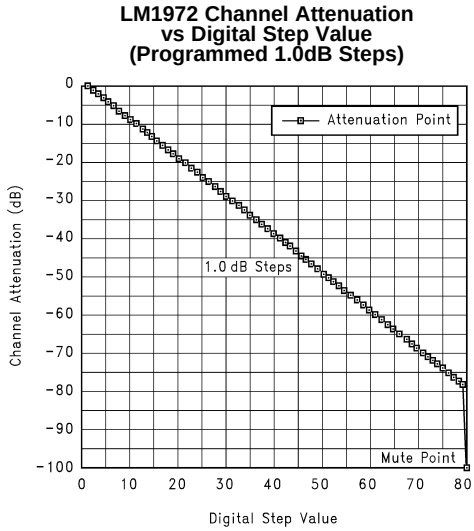

Figure 17. LM1972 1.0dB Attenuation Step Scheme

Copyright © 1995–2013, Texas Instruments Incorporated

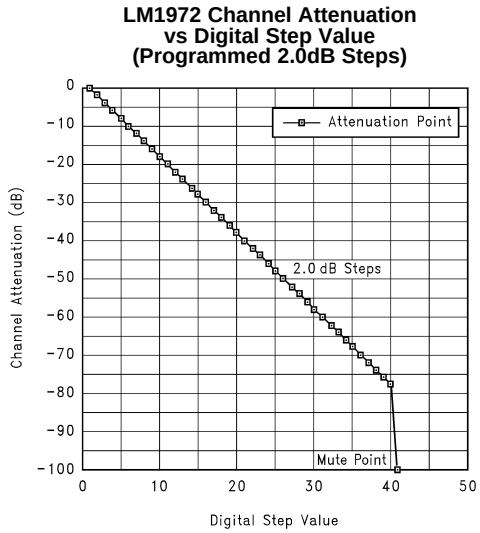

Figure 18. LM1972 2.0dB Attenuation Step Scheme

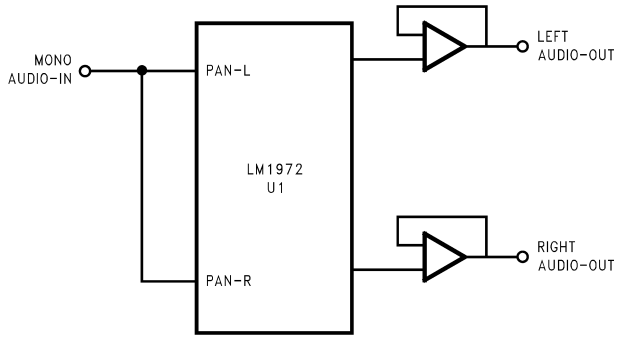

Figure 19. Mono Panning Circuit

INPUT IMPEDANCE

The input impedance of a µPot is constant at a nominal 40 kΩ. To eliminate any unwanted DC components from propagating through the device it is common to use 1 µF input coupling caps. This is not necessary, however, if the dc offset from the previous stage is negligible. For higher performance systems, input coupling caps are preferred.

OUTPUT IMPEDANCE

The output of a µPot varies typically between 25 kΩ and 35 kΩ and changes nonlinearly with step changes. Since a µPot is made up of a resistor ladder network with a logarithmic attenuation, the output impedance is nonlinear. Due to this configuration, a µPot cannot be considered as a linear potentiometer, but can be considered only as a logarithmic attenuator.

It should be noted that the linearity of a µPot cannot be measured directly without a buffer because the input impedance of most measurement systems is not high enough to provide the required accuracy. Due to the low impedance of the measurement system, the output of the µPot would be loaded down and an incorrect reading will result. To prevent loading from occurring, a JFET input op amp should be used as the buffer/amplifier. The performance of a µPot is limited only by the performance of the external buffer/amplifier.

MUTE FUNCTION

One major feature of a µPot is its ability to mute the input signal to an attenuation level of 104dB as shown in Figure 16. This is accomplished internally by physically isolating the output from the input while also grounding the output pin through approximately 2 kΩ.

Copyright © 1995–2013, Texas Instruments Incorporated

The mute function is obtained during power-up of the device or by sending any binary data of 01111111 and above (to 11111111) serially to the device. The device may be placed into mute from a previous attenuation setting by sending any of the above data. This allows the designer to place a mute button onto his system which could cause a microcontroller to send the appropriate data to a µPot and thus mute any or all channels. Since this function is achieved through software, the designer has a great amount of flexibility in configuring the system.

DC INPUTS

Although the µPot was designed to be used as an attenuator for signals within the audio spectrum, the device is capable of tracking an input DC voltage. The device will track DC voltages to a diode drop above each supply rail.

One point to remember about DC tracking is that with a buffer at the output of the µPot, the resolution of DC tracking will depend upon the gain configuration of that output buffer and its supply voltage. It should also be remembered that the output buffer's supply voltage does not have to be the same as the µPot's supply voltage. This could allow for more resolution when DC tracking.

SERIAL DATA FORMAT

The LM1972 uses a 3-wire serial communication format that is easily controlled by a microcontroller. The timing for the 3-wire set, comprised of DATA-IN, CLOCK, and LOAD/SHIFT is shown in Figure 3. Figure 22 exhibits in block diagram form how the digital interface controls the tap switches which select the appropriate attenuation level. As depicted in Figure 3, the LOAD/SHIFT line is to go low at least 150 ns before the rising edge of the first clock pulse and is to remain low throughout the transmission of each set of 16 data bits. The serial data is comprised of 8 bits for channel selection and 8 bits for attenuation setting. For both address data and attenuation setting data, the MSB is sent first and the 8 bits of address data are to be sent before the 8 bits of attenuation data. Please refer to Figure 20 to confirm the serial data format transfer process.

Table 1. LM1972 Micropot Attenuator Register Set Description

MSB: LSB	
Address Register (Byte 0)	
0000 0000	Channel 1
0000 0001	Channel 2
0000 0010	Channel 3
Data Register (Byte 1)	
Contents	**Attenuation Level dB**
0000 0000	0.0
0000 0001	0.5
0000 0010	1.0
0000 0011	1.5
: : : : :	: :
0001 1110	15.0
0001 1111	15.5
0010 0000	16.0
0010 0001	16.5
0010 0010	17.0
: : : : :	: :
0101 1110	47.0
0101 1111	47.5
0110 0000	48.0
0110 0001	49.0
0110 0010	50.0
: : : : :	: :

Copyright © 1995–2013, Texas Instruments Incorporated

Table 1. LM1972 Micropot Attenuator Register Set Description (continued)

MSB: LSB	
0111 1100	76.0
0111 1101	77.0
0111 1110	78.0
0111 1111	100.0 (Mute)
1000 0000	100.0 (Mute)
: : : : :	: :
1111 1110	100.0 (Mute)
1111 1111	100.0 (Mute)

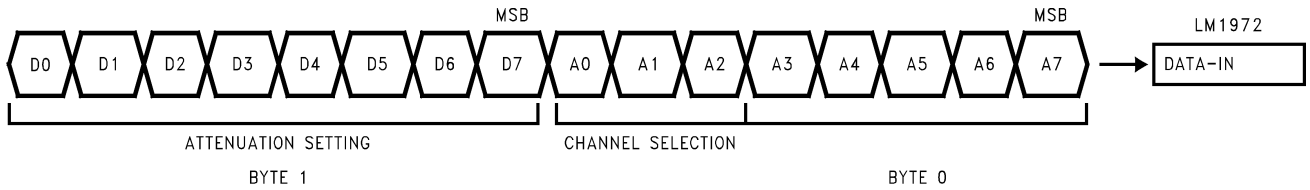

Figure 20. Serial Data Format Transfer Process

µPot SYSTEM ARCHITECTURE

The µPot's digital interface is essentially a shift register, where serial data is shifted in, latched, and then decoded. As new data is shifted into the DATA-IN pin, the previously latched data is shifted out the DATA-OUT pin. Once the data is shifted in, the LOAD/SHIFT line goes high, latching in the new data. The data is then decoded and the appropriate switch is activated to set the desired attenuation level for the selected channel. This process is continued each and every time an attenuation change is made. Each channel is updated, only, when that channel is selected for an attenuator change or the system is powered down and then back up again. When the µPot is powered up, each channel is placed into the muted mode.

µPot LADDER ARCHITECTURE

Each channel of a µPot has its own independent resistor ladder network. As shown in Figure 21, the ladder consists of multiple R1/R2 elements which make up the attenuation scheme. Within each element there are tap switches that select the appropriate attenuation level corresponding to the data bits in Table 1. It can be seen in Figure 21 that the input impedance for the channel is a constant value regardless of which tap switch is selected, while the output impedance varies according to the tap switch selected.

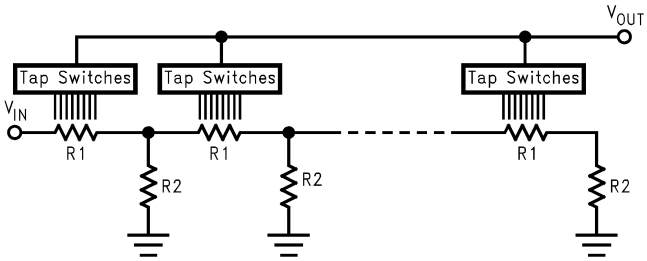

Figure 21. µPot Ladder Architecture

DIGITAL LINE COMPATIBILITY

The µPot's digital interface section is compatible with either TTL or CMOS logic due to the shift register inputs acting upon a threshold voltage of 2 diode drops or approximately 1.4V.

DIGITAL DATA-OUT PIN

The DATA-OUT pin is available for daisy-chain system configurations where multiple µPots will be used. The use of the daisy-chain configuration allows the system designer to use only one DATA and one LOAD/SHIFT line per chain, thus simplifying PCB trace layouts.

In order to provide the highest level of channel separation and isolate any of the signal lines from digital noise, the DATA-OUT pin should be terminated through a 2 kΩ resistor if not used. The pin may be left floating, however, any signal noise on that line may couple to adjacent lines creating higher noise specs.

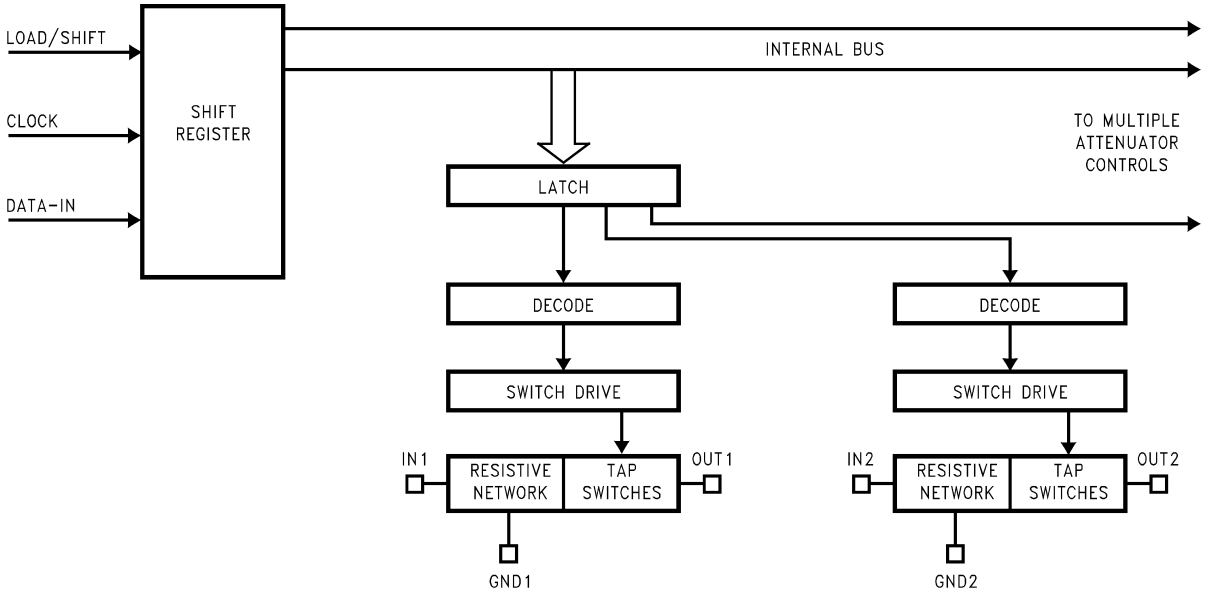

Figure 22. µPot System Architecture

DAISY-CHAIN CAPABILITY

Since the µPot's digital interface is essentially a shift register, multiple µPots can be programmed utilizing the same data and load/shift lines. As shown in Figure 24, for an n-µPot daisy-chain, there are 16n bits to be shifted and loaded for the chain. The data loading sequence is the same for n-µPots as it is for one µPot. First the LOAD/SHIFT line goes low, then the data is clocked in sequentially while the preceding data in each µPot is shifted out the DATA-OUT pin to the next µPot in the chain or to ground if it is the last µPot in the chain. Then the LOAD/SHIFT line goes high; latching the data into each of their corresponding µPots. The data is then decoded according to the address (channel selection) and the appropriate tap switch controlling the attenuation level is selected.

CROSSTALK MEASUREMENTS

The crosstalk of a µPot as shown in the Typical Performance Characteristics was obtained by placing a signal on one channel and measuring the level at the output of another channel of the same frequency. It is important to be sure that the signal level being measured is of the same frequency such that a true indication of crosstalk may be obtained. Also, to ensure an accurate measurement, the measured channel's input should be AC grounded through a 1 µF capacitor.

Copyright © 1995–2013, Texas Instruments Incorporated

CLICKS AND POPS

So, why is that output buffer needed anyway? There are three answers to this question, all of which are important from a system point of view.

The first reason to utilize a buffer/amplifier at the output of a µPot is to ensure that there are no audible clicks or pops due to attenuation step changes in the device. If an on-board bipolar op amp had been used for the output stage, its requirement of a finite amount of DC bias current for operation would cause a DC voltage “pop” when the output impedance of the µPot changes. Again, this phenomenon is due to the fact that the output impedance of the µPot is changing with step changes and a bipolar amplifier requires a finite amount of DC bias current for its operation. As the impedance changes, so does the DC bias current and thus there is a DC voltage “pop”.

Secondly, the µPot has no drive capability, so any desired gain needs to be accomplished through a buffer/non-inverting amplifer.

Third, the output of a µPot needs to see a high impedance to prevent loading and subsequent linearity errors from ocurring. A JFET input buffer provides a high input impedance to the output of the µPot so that this does not occur.

Clicks and pops can be avoided by using a JFET input buffer/amplifier such as an LF412ACN. The LF412 has a high input impedance and exhibits both a low noise floor and low THD+N throughout the audio spectrum which maintains signal integrity and linearity for the system. The performance of the system solution is entirely dependent upon the quality and performance of the JFET input buffer/amplifier.

LOGARITHMIC GAIN AMPUFIER

The µPot is capable of being used in the feedback loop of an amplifier, however, as stated previously, the output of the µPot needs to see a high impedance in order to maintain its high performance and linearity. Again, loading the output will change the values of attenuation for the device. As shown in Figure 23, a µPot used in the feedback loop creates a logarithmic gain amplifier. In this configuration the attenuation levels from Table 1, now become gain levels with the largest possible gain value being 78dB. For most applications 78dB of gain will cause signal clipping to occur, however, because of the µPot's versatility the gain can be controlled through programming such that the clipping level of the system is never obtained. An important point to remember is that when in mute mode the input is disconnected from the output. In this configuration this will place the amplifier in its open loop gain state, thus resulting in severe comparator action. Care should be taken with the programming and design of this type of circuit. To provide the best performance, a JFET input amplifier should be used.

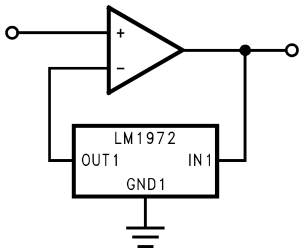

Figure 23. Digitally-Controlled Logarithmic Gain Amplifier Circuit

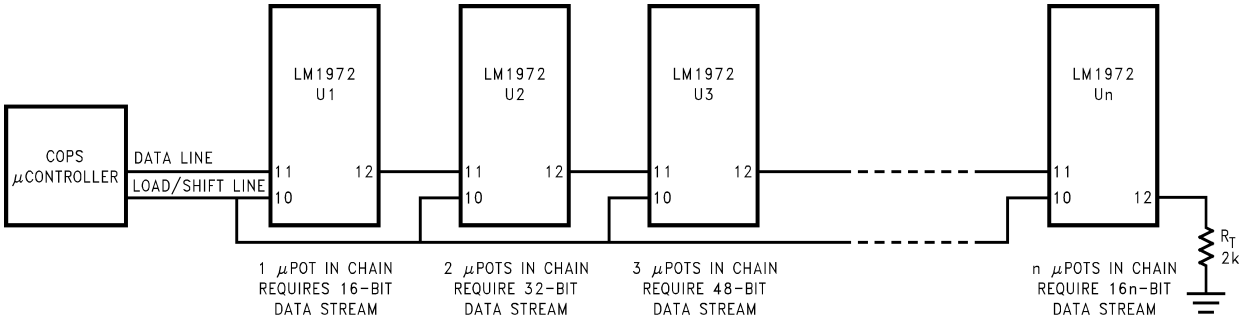

Figure 24. n-µPot Daisy-Chained Circuit

REVISION HISTORY

Changes from Revision C (March 2013) to Revision D	Page
• Changed layout of National Data Sheet to TI format	13

Copyright © 1995–2013, Texas Instruments Incorporated

PACKAGING INFORMATION

Orderable Device	Status (1)	Package Type	Package Drawing	Pins	Package Qty	Eco Plan (2)	Lead/Ball Finish (6)	MSL Peak Temp (3)	Op Temp (°C)	Device Marking (4/5)	Samples
LM1972M	LIFEBUY	SOIC	DW	20	36	TBD	Call TI	Call TI	0 to 70	LM1972M	
LM1972M/NOPB	ACTIVE	SOIC	DW	20	36	Green (RoHS & no Sb/Br)	CU SN	Level-3-260C-168 HR	0 to 70	LM1972M	Samples
LM1972MX/NOPB	ACTIVE	SOIC	DW	20	1000	Green (RoHS & no Sb/Br)	CU SN	Level-3-260C-168 HR	0 to 70	LM1972M	Samples

(1) The marketing status values are defined as follows:
ACTIVE: Product device recommended for new designs.
LIFEBUY: TI has announced that the device will be discontinued, and a lifetime-buy period is in effect.
NRND: Not recommended for new designs. Device is in production to support existing customers, but TI does not recommend using this part in a new design.
PREVIEW: Device has been announced but is not in production. Samples may or may not be available.
OBSOLETE: TI has discontinued the production of the device.

(2) **RoHS:** TI defines "RoHS" to mean semiconductor products that are compliant with the current EU RoHS requirements for all 10 RoHS substances, including the requirement that RoHS substance do not exceed 0.1% by weight in homogeneous materials. Where designed to be soldered at high temperatures, "RoHS" products are suitable for use in specified lead-free processes. TI may reference these types of products as "Pb-Free".
RoHS Exempt: TI defines "RoHS Exempt" to mean products that contain lead but are compliant with EU RoHS pursuant to a specific EU RoHS exemption.
Green: TI defines "Green" to mean the content of Chlorine (Cl) and Bromine (Br) based flame retardants meet JS709B low halogen requirements of <=1000ppm threshold. Antimony trioxide based flame retardants must also meet the <=1000ppm threshold requirement.

(3) MSL, Peak Temp. - The Moisture Sensitivity Level rating according to the JEDEC industry standard classifications, and peak solder temperature.

(4) There may be additional marking, which relates to the logo, the lot trace code information, or the environmental category on the device.

(5) Multiple Device Markings will be inside parentheses. Only one Device Marking contained in parentheses and separated by a "~" will appear on a device. If a line is indented then it is a continuation of the previous line and the two combined represent the entire Device Marking for that device.

(6) Lead/Ball Finish - Orderable Devices may have multiple material finish options. Finish options are separated by a vertical ruled line. Lead/Ball Finish values may wrap to two lines if the finish value exceeds the maximum column width.

Important Information and Disclaimer: The information provided on this page represents TI's knowledge and belief as of the date that it is provided. TI bases its knowledge and belief on information provided by third parties, and makes no representation or warranty as to the accuracy of such information. Efforts are underway to better integrate information from third parties. TI has taken and continues to take reasonable steps to provide representative and accurate information but may not have conducted destructive testing or chemical analysis on incoming materials and chemicals. TI and TI suppliers consider certain information to be proprietary, and thus CAS numbers and other limited information may not be available for release.

In no event shall TI's liability arising out of such information exceed the total purchase price of the TI part(s) at issue in this document sold by TI to Customer on an annual basis.

TAPE AND REEL INFORMATION

REEL DIMENSIONS

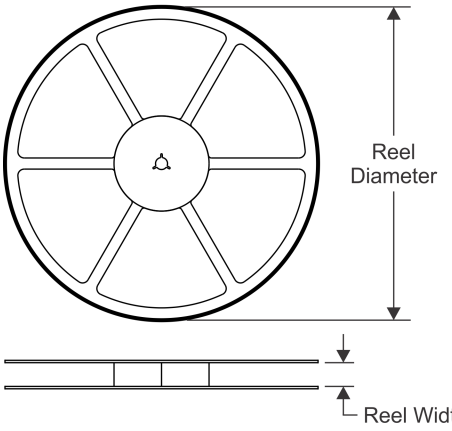

TAPE DIMENSIONS

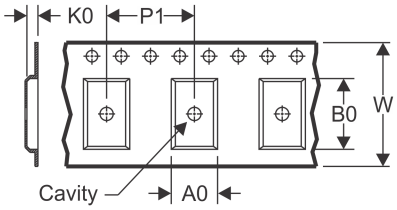

A0	Dimension designed to accommodate the component width
B0	Dimension designed to accommodate the component length
K0	Dimension designed to accommodate the component thickness
W	Overall width of the carrier tape
P1	Pitch between successive cavity centers

QUADRANT ASSIGNMENTS FOR PIN 1 ORIENTATION IN TAPE

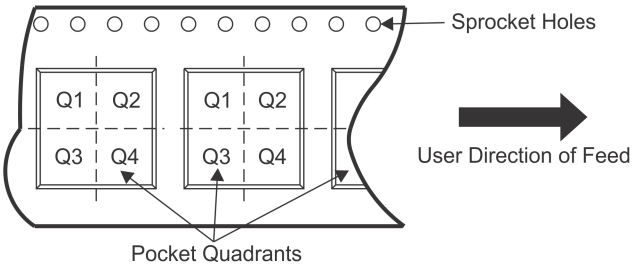

*All dimensions are nominal

Device	Package Type	Package Drawing	Pins	SPQ	Reel Diameter (mm)	Reel Width W1 (mm)	A0 (mm)	B0 (mm)	K0 (mm)	P1 (mm)	W (mm)	Pin1 Quadrant
LM1972MX/NOPB	SOIC	DW	20	1000	330.0	24.4	10.9	13.3	3.25	12.0	24.0	Q1

TAPE AND REEL BOX DIMENSIONS

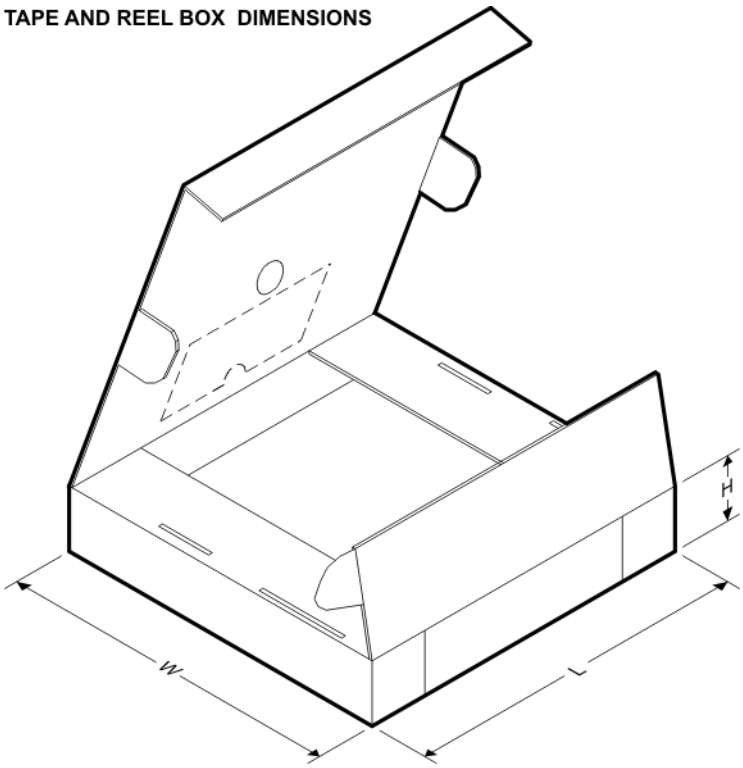

*All dimensions are nominal

Device	Package Type	Package Drawing	Pins	SPQ	Length (mm)	Width (mm)	Height (mm)
LM1972MX/NOPB	SOIC	DW	20	1000	367.0	367.0	45.0

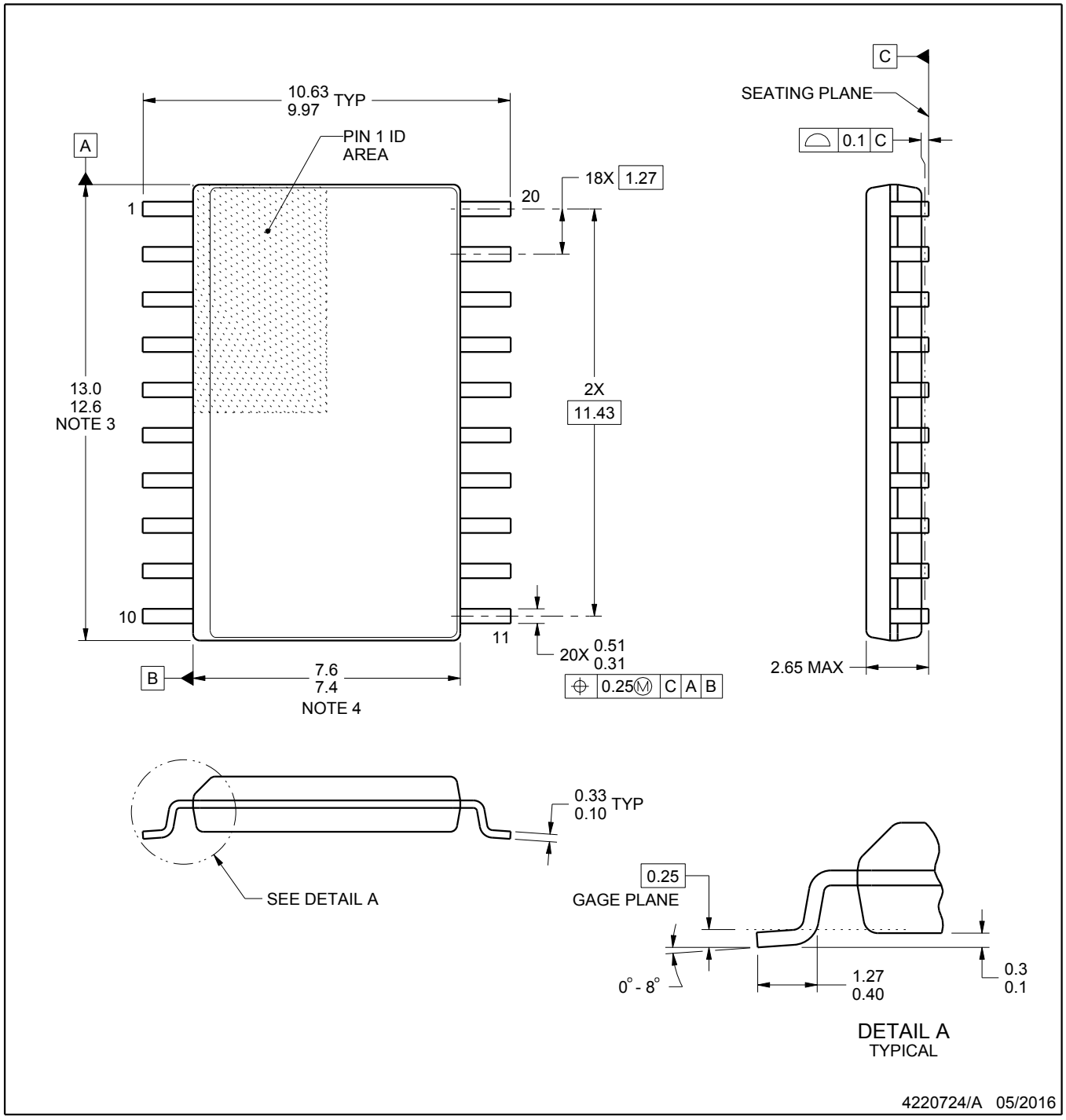

NOTES:

1. All linear dimensions are in millimeters. Dimensions in parenthesis are for reference only. Dimensioning and tolerancing per ASME Y14.5M.
2. This drawing is subject to change without notice.
3. This dimension does not include mold flash, protrusions, or gate burrs. Mold flash, protrusions, or gate burrs shall not exceed 0.15 mm per side.
4. This dimension does not include interlead flash. Interlead flash shall not exceed 0.43 mm per side.
5. Reference JEDEC registration MS-013.

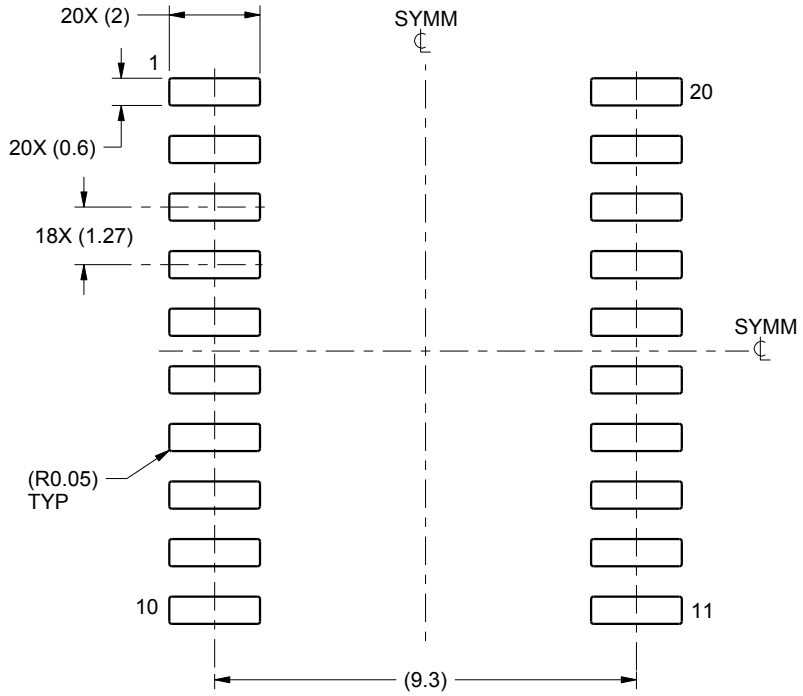

LAND PATTERN EXAMPLE
SCALE:6X

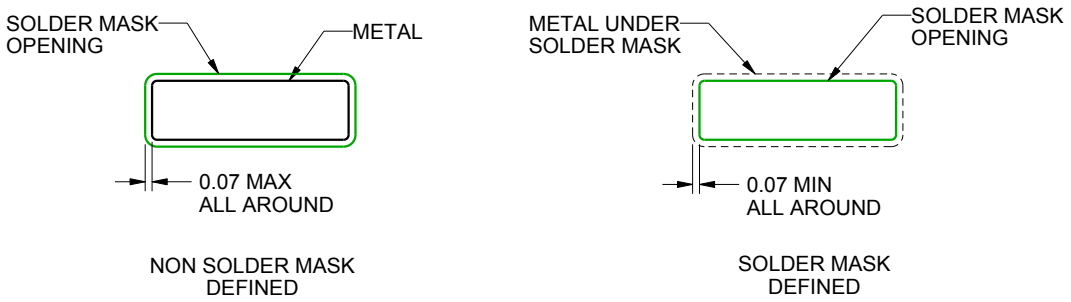

SOLDER MASK DETAILS

4220724/A 05/2016

NOTES: (continued)

6. Publication IPC-7351 may have alternate designs.
7. Solder mask tolerances between and around signal pads can vary based on board fabrication site.

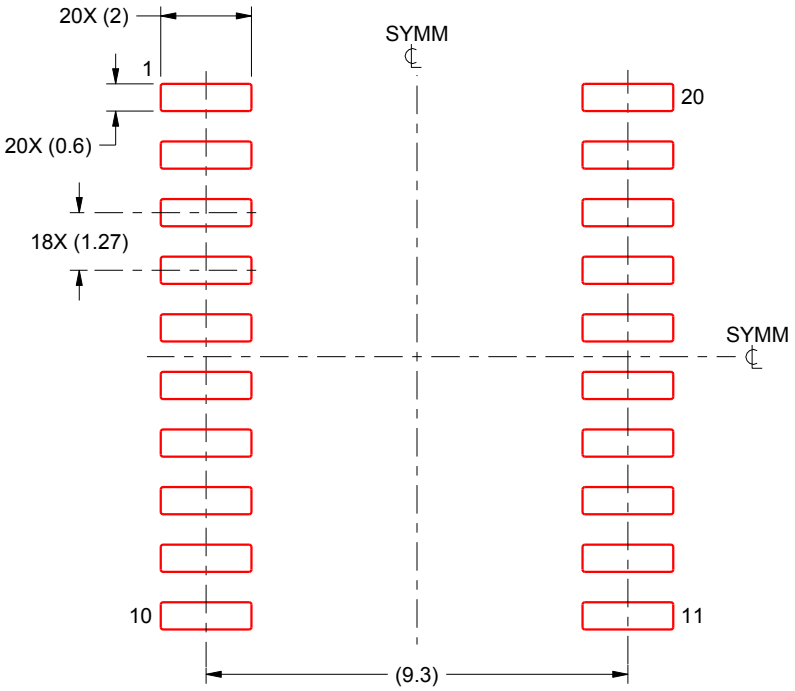

SOLDER PASTE EXAMPLE
BASED ON 0.125 mm THICK STENCIL
SCALE:6X

4220724/A 05/2016

NOTES: (continued)

8. Laser cutting apertures with trapezoidal walls and rounded corners may offer better paste release. IPC-7525 may have alternate design recommendations.
9. Board assembly site may have different recommendations for stencil design.

IMPORTANT NOTICE

Texas Instruments Incorporated (TI) reserves the right to make corrections, enhancements, improvements and other changes to its semiconductor products and services per JESD46, latest issue, and to discontinue any product or service per JESD48, latest issue. Buyers should obtain the latest relevant information before placing orders and should verify that such information is current and complete.

TI's published terms of sale for semiconductor products (http://www.ti.com/sc/docs/stdterms.htm) apply to the sale of packaged integrated circuit products that TI has qualified and released to market. Additional terms may apply to the use or sale of other types of TI products and services.

Reproduction of significant portions of TI information in TI data sheets is permissible only if reproduction is without alteration and is accompanied by all associated warranties, conditions, limitations, and notices. TI is not responsible or liable for such reproduced documentation. Information of third parties may be subject to additional restrictions. Resale of TI products or services with statements different from or beyond the parameters stated by TI for that product or service voids all express and any implied warranties for the associated TI product or service and is an unfair and deceptive business practice. TI is not responsible or liable for any such statements.

Buyers and others who are developing systems that incorporate TI products (collectively, "Designers") understand and agree that Designers remain responsible for using their independent analysis, evaluation and judgment in designing their applications and that Designers have full and exclusive responsibility to assure the safety of Designers' applications and compliance of their applications (and of all TI products used in or for Designers' applications) with all applicable regulations, laws and other applicable requirements. Designer represents that, with respect to their applications, Designer has all the necessary expertise to create and implement safeguards that (1) anticipate dangerous consequences of failures, (2) monitor failures and their consequences, and (3) lessen the likelihood of failures that might cause harm and take appropriate actions. Designer agrees that prior to using or distributing any applications that include TI products, Designer will thoroughly test such applications and the functionality of such TI products as used in such applications.

TI's provision of technical, application or other design advice, quality characterization, reliability data or other services or information, including, but not limited to, reference designs and materials relating to evaluation modules, (collectively, "TI Resources") are intended to assist designers who are developing applications that incorporate TI products; by downloading, accessing or using TI Resources in any way, Designer (individually or, if Designer is acting on behalf of a company, Designer's company) agrees to use any particular TI Resource solely for this purpose and subject to the terms of this Notice.

TI's provision of TI Resources does not expand or otherwise alter TI's applicable published warranties or warranty disclaimers for TI products, and no additional obligations or liabilities arise from TI providing such TI Resources. TI reserves the right to make corrections, enhancements, improvements and other changes to its TI Resources. TI has not conducted any testing other than that specifically described in the published documentation for a particular TI Resource.

Designer is authorized to use, copy and modify any individual TI Resource only in connection with the development of applications that include the TI product(s) identified in such TI Resource. NO OTHER LICENSE, EXPRESS OR IMPLIED, BY ESTOPPEL OR OTHERWISE TO ANY OTHER TI INTELLECTUAL PROPERTY RIGHT, AND NO LICENSE TO ANY TECHNOLOGY OR INTELLECTUAL PROPERTY RIGHT OF TI OR ANY THIRD PARTY IS GRANTED HEREIN, including but not limited to any patent right, copyright, mask work right, or other intellectual property right relating to any combination, machine, or process in which TI products or services are used. Information regarding or referencing third-party products or services does not constitute a license to use such products or services, or a warranty or endorsement thereof. Use of TI Resources may require a license from a third party under the patents or other intellectual property of the third party, or a license from TI under the patents or other intellectual property of TI.

TI RESOURCES ARE PROVIDED "AS IS" AND WITH ALL FAULTS. TI DISCLAIMS ALL OTHER WARRANTIES OR REPRESENTATIONS, EXPRESS OR IMPLIED, REGARDING RESOURCES OR USE THEREOF, INCLUDING BUT NOT LIMITED TO ACCURACY OR COMPLETENESS, TITLE, ANY EPIDEMIC FAILURE WARRANTY AND ANY IMPLIED WARRANTIES OF MERCHANTABILITY, FITNESS FOR A PARTICULAR PURPOSE, AND NON-INFRINGEMENT OF ANY THIRD PARTY INTELLECTUAL PROPERTY RIGHTS. TI SHALL NOT BE LIABLE FOR AND SHALL NOT DEFEND OR INDEMNIFY DESIGNER AGAINST ANY CLAIM, INCLUDING BUT NOT LIMITED TO ANY INFRINGEMENT CLAIM THAT RELATES TO OR IS BASED ON ANY COMBINATION OF PRODUCTS EVEN IF DESCRIBED IN TI RESOURCES OR OTHERWISE. IN NO EVENT SHALL TI BE LIABLE FOR ANY ACTUAL, DIRECT, SPECIAL, COLLATERAL, INDIRECT, PUNITIVE, INCIDENTAL, CONSEQUENTIAL OR EXEMPLARY DAMAGES IN CONNECTION WITH OR ARISING OUT OF TI RESOURCES OR USE THEREOF, AND REGARDLESS OF WHETHER TI HAS BEEN ADVISED OF THE POSSIBILITY OF SUCH DAMAGES.

Unless TI has explicitly designated an individual product as meeting the requirements of a particular industry standard (e.g., ISO/TS 16949 and ISO 26262), TI is not responsible for any failure to meet such industry standard requirements.

Where TI specifically promotes products as facilitating functional safety or as compliant with industry functional safety standards, such products are intended to help enable customers to design and create their own applications that meet applicable functional safety standards and requirements. Using products in an application does not by itself establish any safety features in the application. Designers must ensure compliance with safety-related requirements and standards applicable to their applications. Designer may not use any TI products in life-critical medical equipment unless authorized officers of the parties have executed a special contract specifically governing such use. Life-critical medical equipment is medical equipment where failure of such equipment would cause serious bodily injury or death (e.g., life support, pacemakers, defibrillators, heart pumps, neurostimulators, and implantables). Such equipment includes, without limitation, all medical devices identified by the U.S. Food and Drug Administration as Class III devices and equivalent classifications outside the U.S.

TI may expressly designate certain products as completing a particular qualification (e.g., Q100, Military Grade, or Enhanced Product). Designers agree that it has the necessary expertise to select the product with the appropriate qualification designation for their applications and that proper product selection is at Designers' own risk. Designers are solely responsible for compliance with all legal and regulatory requirements in connection with such selection.

Designer will fully indemnify TI and its representatives against any damages, costs, losses, and/or liabilities arising out of Designer's non-compliance with the terms and provisions of this Notice.

Mailing Address: Texas Instruments, Post Office Box 655303, Dallas, Texas 75265
Copyright © 2017, Texas Instruments Incorporated